DocuSign Envelope ID: E75D07EB-649C-4F02-83CB-9AEA88AFBCC6

6/2/99

PROJECT REFERENCE NO.	SHEET NO.
17BP.14.R.149	2A-1

ROADWAY DESIGN ENGINEER	PAVEMENT DESIGN ENGINEER
NORTH CAROLINA PROFESSIONAL SEAL ENGINEER JOHN C. LANSFORD	NORTH CAROLINA PROFESSIONAL SEAL ENGINEER REECE M. SCHULER
7/13/2021	7/13/2021

DOCUMENT NOT CONSIDERED FINAL UNLESS ALL SIGNATURES COMPLETED

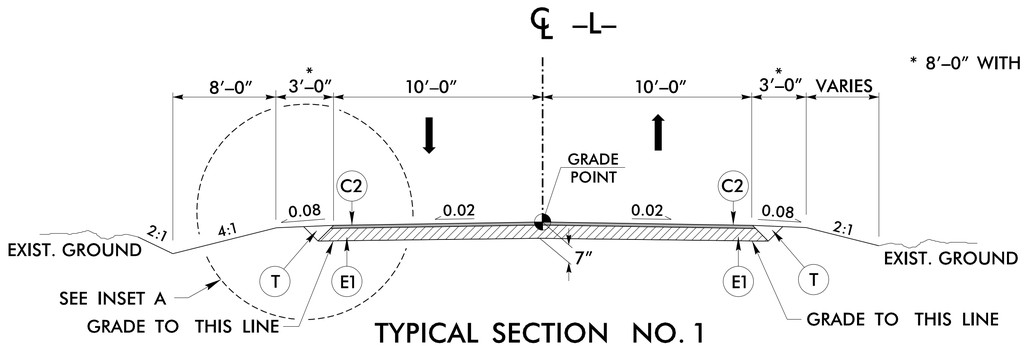

* 8′–0″ WITH GUARDRAIL

TYPICAL SECTION NO. 1

USE TYPICAL SECTION NO. 1

–L– STA. 11+45.00 TO –L– STA. 13+18.87 (BEGIN BRIDGE)
–L– STA. 13+97.00 TO –L– STA. 15+20.00

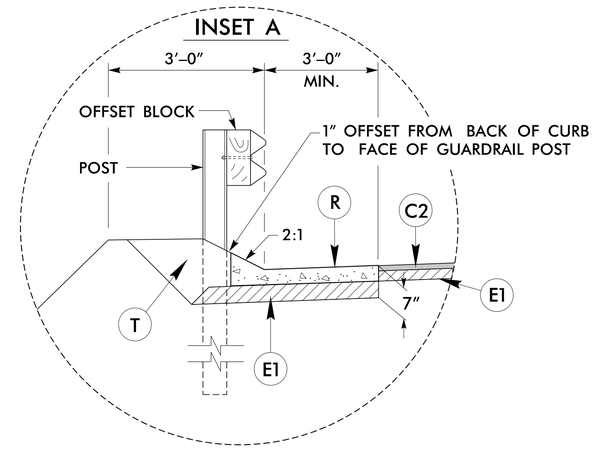

INSET A

–L– STA. 13+78.13 (END APPROACH SLAB) TO –L– STA. 13+97.00 LT

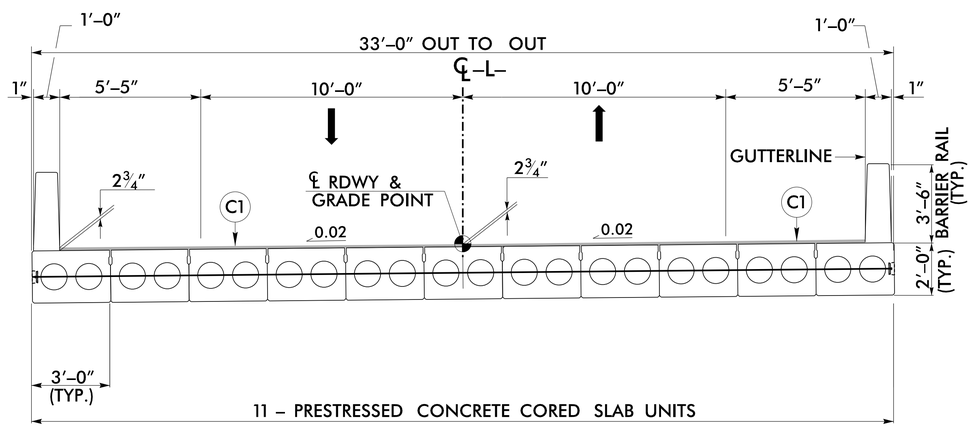

TYPICAL SECTION NO. 2

USE TYPICAL SECTION NO. 2

–L– STA. 13+18.87 (BEGIN BRIDGE) TO
–L– STA. 13+66.13 (END BRIDGE)

PAVEMENT SCHEDULE	
C1	PROP. APPROX. 2 3/4″ ASPHALT CONCRETE SURFACE COURSE, TYPE S9.5C, AT AN AVERAGE RATE OF 154 LBS. PER SQ. YD. IN EACH OF TWO LAYERS.
C2	PROP. APPROX. 3″ ASPHALT CONCRETE SURFACE COURSE, TYPE S9.5C, AT AN AVERAGE RATE OF 168 LBS. PER SQ. YD. IN EACH OF TWO LAYERS.
E1	PROP. APPROX. 4″ ASPHALT CONCRETE BASE COURSE, TYPE B25.0C, AT AN AVERAGE RATE OF 456 LBS. PER SQ. YD.
R	SHOULDER BERM GUTTER (NCDOT STD. DWG. 846.01)
T	EARTH MATERIAL

NOTE: PAVEMENT EDGE SLOPES ARE 1:1 UNLESS SHOWN OTHERWISE

4/14/2021 2:02:00 PM
r:\p0\17bp0149\17bp0149_185_typ.dgn
lisaramirezpatrick